闸阀 Gate Valve

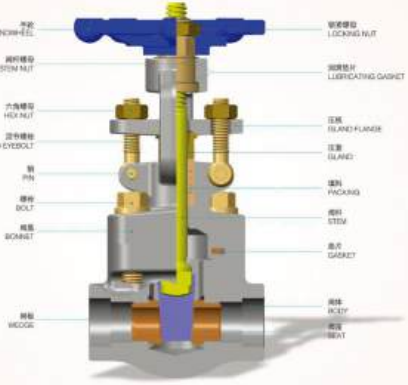

欧沃斯铸钢闸阀工种结构设计形式：

(1) 螺栓式阀盖，其阀体与阀盖用螺栓连接，密封式垫片（Flexible类型石墨制造）或平用金属环连接密封。

(2) 焊接式阀盖，其阀体与阀盖用螺栓连接，全焊密封。

(3) 压力自紧式阀盖，其阀体与阀盖用螺栓连接，内压自密封环密封。

Dervos forged steel gate valve is available in three kinds of bonnet design:

(1) Bolted Bonnet: The body and bonnet is connected by bolts with spiral wound gasket (304+graphite) or metal ring sealed.

(2) Welded Bonnet: The body and bonnet is screwed and sealed by welding.

(3) Pressure Sealed Bonnet: The body and bonnet is screwed and sealed by inside pressure self-sealed ring.

DERVOS

厦门欧沃阀门有限股份有限公司
Xiamen Dervos Valves Industry Co.,Ltd

FORGED STEEL GATE VALVE – Outside Screw & Yoke, Bolted Bonnet

锻钢闸阀 – 明杆无缝，阀盖螺栓连接

材料标准 STANDARD MATERIALS

零件名称 PART NAMES	材料 MATERIALS
阀体 BODY	注释 NOTE(1)
阀盖 BONNET	注释 NOTE(1)
阀板 SEAT	ASTM A276 410 or F
楔板 WEDGE	ASTM A276 420
阀杆 STEM	ASTM A276 410
垫片 GASKET	304+GRAPHITE
手轮 HANDWHEEL	ASTM A197
填料 PACKING	GRAPHITE
压盖 GLAND	ASTM A276 410

注释NOTE：(1) A105, LF2, F5, F11, F22, F304(L), F316(L), F347, F321, F51, F55 Nickel, Monel, Hastelloy, etc.

技术参数 SPECIFICATIONS

(1) 设计制造标准 Design & Manufacture Conform to: API 600, 3000LB, ASME B16.34/B16.11/B1.20.1/B16.25

(2) 阀门尺寸 Valve Size: 1/2"~4" (3) 应用额定 Applicable Rating Class: 150LB ~ 1500LB

(4) 适用温度 Temperature Rating: Up to 538℃

(5) 结构特征 Structure Features:

★连接端类型 End Connection: 螺纹、承插焊或对焊连接端 Threaded, Socket-Welded or Butt-Welded

★明杆无缝、阀盖螺栓连接 Outside Screw & Yoke, Bolted Bonnet ★缩径 / 全径 Reduce Bore / Full Bore

★升杆式 / 非上升手轮 Rising Stem / Non-Rising Handwheel

公称尺寸 (inch)	阀体 BODY	上密封 SEAT RING (mm)		阀盖 BONNET (mm)	
	壁厚 (mm)	D	d	缩径	全径
		缩径	全径		
1/2LB	4.5	12.5	20.5		
3/4LB	5.5	17.5	25.5		
1LB	6.5	22.5	28.5		
1.5LB	8.5	28.5	37.5		
2LB	10.5	35.5	46.5		
2.5LB	12.5	41.5	54.5		
3LB	14.5	47.5	62.5		
4LB	16.5	53.5	70.5		

FORGED STEEL GATE VALVE – Outside Screw & Yoke, Welded Bonnet

锻钢闸阀 – 明杆无缝，阀盖焊接连接

材料标准 STANDARD MATERIALS

零件名称 PART NAMES	材料 MATERIALS
阀体 BODY	注释 NOTE(1)
阀盖 BONNET	注释 NOTE(1)
阀板 SEAT	ASTM A276 410 or F
楔板 WEDGE	ASTM A276 420
阀杆 STEM	ASTM A276 410
手轮 HANDWHEEL	ASTM A197
填料 PACKING	GRAPHITE
压盖 GLAND	ASTM A276 410

注释NOTE：(1) A105, LF2, F5, F11, F22, F304(L), F316(L), F347, F321, F51, F55 Nickel, Monel, Hastelloy, etc.

技术参数 SPECIFICATIONS

(1) 设计制造标准 Design & Manufacture Conform to: API 600, 3000LB, ASME B16.34/B16.11/B1.20.1/B16.25

(2) 阀门尺寸 Valve Size: 1/2"~4" (3) 应用额定 Applicable Rating Class: 150LB ~ 2500LB

(4) 适用温度 Temperature Rating: Up to 538℃

(5) 结构特征 Structure Features:

★连接端类型 End Connection: 螺纹、承插焊或对焊连接端 Threaded, Socket-Welded or Butt-Welded

★明杆无缝、阀盖焊接连接 Outside Screw & Yoke, Welded Bonnet ★缩径 / 全径 Reduce Bore / Full Bore

★升杆式 / 非上升手轮 Rising Stem / Non-Rising Handwheel

公称尺寸 (inch)	阀体 BODY	上密封 SEAT RING (mm)		阀盖 BONNET (mm)	
	壁厚 (mm)	D	d	缩径	全径
		缩径	全径		
1/2LB	4.5	12.5	20.5		
3/4LB	5.5	17.5	25.5		
1LB	6.5	22.5	28.5		
1.5LB	8.5	28.5	37.5		
2LB	10.5	35.5	46.5		
2.5LB	12.5	41.5	54.5		
3LB	14.5	47.5	62.5		
4LB	16.5	53.5	70.5		
250LB	19.5	59.5	80.5	–	88.5

FORGED STEEL GATE VALVE – Outside Screw & Yoke, Bolted Bonnet

锻钢闸阀 – 明杆支架，阀盖螺栓连接

材料标准 STANDARD MATERIALS

零件名称 PART NAMES	材料 MATERIALS
阀体 BODY	法兰 NOTE1
阀盖 BONNET	法兰 NOTE1
阀座 SEAT	ASTM A276 410+HF
阀板 WEDGE	ASTM A276 420
阀杆 STEM	ASTM A276 410
阀杆 STEM	304 SS
手轮 HANDWHEEL	ASTM A197
填料 PACKING	GRAPHITE
压盖 GLAND	ASTM A276 410

注解NOTE：F: A105, LF2 F6, F11, F22, F304L, F316L, F347, F321, F51, F60

压力等级 (ANSI) PRESSURE TEST (P-100)

等级 CLASS	壳体 SHELL (psig)	上密封 SEAT (psig)	背密 SEAT (psig)
	水 WATER	水 WATER	空气 AIR	水 WATER
150LB	300	200	30	–
300LB	750	600	30	–
600LB	1500	1200	30	–
900LB	2250	1800	30	–
1500LB	3750	3000	–	3000

技术参数 SPECIFICATIONS

(1) 设计制造标准 Design & Manufacture Conform to: API 600, 602/602, ASME B16.34/B16.11/31.3, GB16.25

(2) 阀门尺寸 Valve Size: 1/2"~4" (3) 公称压力 Applicable Rating: Class 150LB ~ 2500LB

(4) 温度等级 Temperature Rating: Up to 538°C

(5) 结构特征 Structure Features:

- 连接端类型 End Connection: 螺纹、承插焊或对焊端连接 Threaded, Socket-Welded or Butt-Welded
- 明杆支架，阀盖螺栓连接 Outside Screw & Yoke, Bolted Bonnet ● 缩径 Reduce Bore / Full Bore
- 升杆式 / 非上升手轮 Rising Stem / Non-Rising Handwheel

FORGED STEEL GATE VALVE – Outside Screw & Yoke, Pressure-Seal Bonnet

锻钢闸阀 – 明杆支架，压力自紧式密封阀盖

材料标准 STANDARD MATERIALS

零件名称 PART NAMES	材料 MATERIALS
阀体 BODY	法兰 NOTE1
阀盖 BONNET	法兰 NOTE1
阀座 SEAT	ASTM A276 410+HF
阀板 WEDGE	ASTM A276 420
阀杆 STEM	ASTM A276 410
阀座密封 T-SEAT	304 SS
手轮 HANDWHEEL	ASTM A197
填料 PACKING	GRAPHITE
压盖 GLAND	ASTM A276 410

注解NOTE：F: A105, LF2 F6, F11, F22, F304L, F316L, F347, F321, F51, F60

压力等级 (ANSI) PRESSURE TEST (P-100)

等级 CLASS	壳体 SHELL (psig)	上密封 SEAT (psig)	背密 SEAT (psig)
	水 WATER	水 WATER	空气 AIR	水 WATER
150LB	300	200	30	–
300LB	750	600	30	–
600LB	1500	1200	30	–
900LB	2250	1800	30	–
1500LB	3750	3000	–	3000

技术参数 SPECIFICATIONS

(1) 设计制造标准 Design & Manufacture Conform to: API 600, 602/602, ASME B16.34/B16.11/31.3

(2) 阀门尺寸 Valve Size: 1/2"~4" (3) 公称压力 Applicable Rating: Class 150LB ~ 2500LB

(4) 温度等级 Temperature Rating: Up to 538°C

(5) 结构特征 Structure Features:

- 连接端类型 End Connection: 螺纹、承插焊或对焊端连接 Threaded, Socket-Welded or Butt-Welded
- 明杆支架，压力自紧式密封阀盖 Outside Screw & Yoke, Pressure-Seal Bonnet
- 缩径 / 全径 Reduce Bore / Full Bore
- 升杆式 / 非上升手轮 Rising Stem / Non-Rising Handwheel

FORGED STEEL FLANGED GATE VALVE – Outside Screw & Yoke, Bolted Bonnet

锻钢法兰连接闸阀 – 明杆支架，阀盖螺栓连接

材料标准 STANDARD MATERIALS

零件名称 PART NAMES	材料 MATERIALS
阀体 BODY	法兰 NOTE1
阀盖 BONNET	法兰 NOTE1
阀座 SEAT	ASTM A276 410+HF
阀板 WEDGE	ASTM A276 420
阀杆 STEM	ASTM A276 410
垫片 GASKET	304+GRAPHITE
手轮 HANDWHEEL	ASTM A197
填料 PACKING	GRAPHITE
压盖 GLAND	ASTM A276 410

注解NOTE：F: A105, LF2 F6, F11, F22, F304L, F316L, F347, F321, F51, F60

压力等级 (ANSI) PRESSURE TEST (P-100)

等级 CLASS	壳体 SHELL (psig)	上密封 SEAT (psig)	背密 SEAT (psig)
	水 WATER	水 WATER	空气 AIR	水 WATER
150LB	450	300	30	–
300LB	1125	900	30	–
600LB	2250	1800	30	–
900LB	3375	2175	30	–
1500LB	5625	4500	30	–
1500LB	5625	4500	30	–

技术参数 SPECIFICATIONS

(1) 设计制造标准 Design & Manufacture Conform to: API 600, 602/602, ASME B16.34/B16.5

(2) 阀门尺寸 Valve Size: 1/2"~4" (3) 公称压力 Applicable Rating: Class 150LB ~ 1500LB

(4) 温度等级 Temperature Rating: Up to 538°C

(5) 结构特征 Structure Features:

- 连接端类型 End Connection: 法兰连接端 Flanged Type
- 明杆支架，阀盖螺栓连接 Outside Screw & Yoke, Bolted Bonnet ● 缩径 Reduce Bore
- 升杆式 / 非上升手轮 Rising Stem / Non-Rising Handwheel

FORGED STEEL FLANGED GATE VALVE – Outside Screw & Yoke, Bolted Bonnet

锻钢法兰连接闸阀 – 明杆支架，阀盖螺栓连接

材料标准 STANDARD MATERIALS

零件名称 PART NAMES	材料 MATERIALS
阀体 BODY	法兰 NOTE1
阀盖 BONNET	法兰 NOTE1
阀座 SEAT	ASTM A276 410+HF
阀板 WEDGE	ASTM A276 420
阀杆 STEM	ASTM A276 410
垫片 GASKET	304+GRAPHITE
手轮 HANDWHEEL	ASTM A197
填料 PACKING	GRAPHITE
压盖 GLAND	ASTM A276 410

注解NOTE：F: A105, LF2 F6, F11, F22, F304L, F316L, F347, F321, F51, F60

压力等级 (ANSI) PRESSURE TEST (P-100)

等级 CLASS	壳体 SHELL (psig)	上密封 SEAT (psig)	背密 SEAT (psig)
	水 WATER	水 WATER	空气 AIR	水 WATER
150LB	450	300	30	–
300LB	1125	900	30	–
600LB	2250	1800	30	–
900LB	3375	2175	30	–
1500LB	5625	4500	30	–
1500LB	5625	4500	30	–

技术参数 SPECIFICATIONS

(1) 设计制造标准 Design & Manufacture Conform to: API 600, 602/602, ASME B16.34/B16.5

(2) 阀门尺寸 Valve Size: 1/2"~4" (3) 公称压力 Applicable Rating: Class 150LB ~ 1500LB

(4) 温度等级 Temperature Rating: Up to 538°C

(5) 结构特征 Structure Features:

- 连接端类型 End Connection: 法兰连接端 Flanged Type
- 明杆支架，阀盖螺栓连接 Outside Screw & Yoke, Bolted Bonnet ● 缩径 Reduce Bore
- 升杆式 / 非上升手轮 Rising Stem / Non-Rising Handwheel

FORGED STEEL FLANGED GATE VALVE – Outside Screw & Yoke, Bolted Bonnet
锻钢法兰连接闸阀 – 明杆支架，阀盖螺栓连接

材料标准 STANDARD MATERIALS

零件名称 PART NAMES	材料 MATERIALS
阀体 BODY	法兰 NOTE1
阀盖 BONNET	法兰 NOTE1
阀座 SEAT	ASTM A276 410+HF
阀板 WEDGE	ASTM A276 410
阀杆 STEM	ASTM A276 410
填料 PACKING	304 SS
手轮 HANDWHEEL	ASTM A197
垫圈 PACKING	GRAPHITE
压盖 GLAND	ASTM A276 410

注解 NOTE: 1) A105,LF2 (5) F11,F22 (7)(8) F304(L) F316(L) F347 (F51 F53 F55 F60 F304H Metal Hardfacing etc.

技术参数 SPECIFICATIONS

(1) 设计制造标准 Design & Manufacture Conform to: API 600, 5000262, ASME B16.34/B16.5
(2) 通门尺寸 Valve Size: 1/2"~4" (3) 应用等级 Applicable Rating: Class 150/3.6 – 250/36.0
(4) 温度等级 Temperature Rating: Up to 538°C
(5) 结构特征 Structure Features:
- 连接端类型 End Connection: 法兰连接端 Flanged Type
- 明杆支架，阀盖螺栓连接 Outside Screw & Yoke, Bolted Bonnet ● 楔型 Reduce Bore
- 升杆式／非上升手轮 Rising Stem / Non-Rising Handwheel

压力测试 TEST PRESSURE				
阀体 BODY	1.5倍工作压力		阀座 SEAT	
	1.5倍工作压力	最小保压时间	1.5倍工作压力	
等级 CLASS	巴 BAR	分钟 MINUTES	巴 BAR	分钟 MINUTES
150LB	30	4.00	30	-
300LB	45	5.00	-	5.00

FORGED STEEL FLANGED CRYOGENIC GATE VALVE – Outside Screw & Yoke, Bolted Bonnet
锻钢法兰连接低温闸阀 – 明杆支架，阀盖螺栓连接

材料标准 STANDARD MATERIALS

零件名称 PART NAMES	材料 MATERIALS
阀体 BODY	法兰 NOTE1
阀盖 BONNET	法兰 NOTE1
阀座 SEAT	ASTM A276 304L,316L,347+HF
阀板 WEDGE	ASTM A276 304L,316L,347
阀杆 STEM	ASTM A276 304L,316L,347
垫片 GASKET	304+GRAPHITE
手轮 HANDWHEEL	ASTM A197
填料 PACKING	GRAPHITE
压盖 GLAND	ASTM A276 304L,316L,347

注解 NOTE: 1) F304L,F316L,F347

技术参数 SPECIFICATIONS

(1) 设计制造标准 Design & Manufacture Conform to: API 600, 5000262, ASME B16.34/B16.5
(2) 通门尺寸 Valve Size: 1/2"~4" (3) 应用等级 Applicable Rating: Class 150/3.6 – 250/36.0
(4) 温度等级 Temperature Rating: Down to: –196°C
(5) 结构特征 Structure Features:
- 连接端类型 End Connection: 法兰连接端 Flanged Type
- 加长型 Long Extended Bonnet ● 执行器 Actuator: Handwheel ● 压力平衡设计（压力平衡设计） Pressure Relief Design (Pressure Balance Design)
- 防火／抗静电设计 Fire Safety / Anti-static Design ● 非上升手轮 Non-Rising Handwheel

FORGED STEEL CRYOGENIC GATE VALVE – Outside Screw & Yoke, Bolted Bonnet
锻钢低温闸阀 – 明杆支架，阀盖螺栓连接

材料标准 STANDARD MATERIALS

零件名称 PART NAMES	材料 MATERIALS
阀体 BODY	法兰 NOTE1
阀盖 BONNET	法兰 NOTE1
阀座 SEAT	ASTM A276 304L,316L,347+HF
阀板 WEDGE	ASTM A276 304L,316L,347
阀杆 STEM	ASTM A276 304L,316L,347
垫片 GASKET	304+GRAPHITE
手轮 HANDWHEEL	ASTM A197
填料 PACKING	GRAPHITE
压盖 GLAND	ASTM A276 304L,316L,347

注解 NOTE: 1) F304L,F316L,F347

技术参数 SPECIFICATIONS

(1) 设计制造标准 Design & Manufacture Conform to: API 600, 5000262, MSS SP – 134, ASME B16.34/B16.5 (1/2"~2), 1/8"B16.25
(2) 通门尺寸 Valve Size: 1/2"~4" (3) 应用等级 Applicable Rating: Class 150/3.6 – 150/10.0
(4) 温度等级 Temperature Rating: Down to: –196°C
(5) 结构特征 Structure Features:
- 连接端类型 End Connection: 螺纹、承插焊或对焊连接端 Threaded, Socket-Welded or Butt-Welded
- 加长型 Long Extended Bonnet ● 执行器 Actuator: Handwheel ● 压力平衡设计（压力平衡设计） Pressure Relief Design (Pressure Balance Design)
- 防火／抗静电设计 Fire Safety / Anti-static Design ● 非上升手轮 Non-Rising Handwheel

FORGED STEEL BELLOWS GATE VALVE – Outside Screw & Yoke, Bolted Bonnet
锻钢波纹管闸阀 – 明杆支架，阀盖螺栓连接

材料标准 STANDARD MATERIALS

零件名称 PART NAMES	材料 MATERIALS
阀体 BODY	法兰 NOTE1
阀盖 BONNET	法兰 NOTE1
阀座 SEAT	ASTM A276 410+HF
阀板 WEDGE	ASTM A276 410
阀杆 STEM	ASTM A276 410
垫片 GASKET	304+GRAPHITE
手轮 HANDWHEEL	ASTM A197
填料 PACKING	GRAPHITE
压盖 GLAND	ASTM A276 410
波纹管 BELLOWS	ASTM A240 316

注解 NOTE: 1) A105,LF2 (5) F11,F22 (7)(8) F304(L) F316(L) F347 (F51 F53 F55 F60 F304H Metal Hardfacing etc.

技术参数 SPECIFICATIONS

(1) 设计制造标准 Design & Manufacture Conform to: API 600, MSS SP – 117, ASME B16.34/B16.5 (1/2"~2), (3)~4)
(2) 通门尺寸 Valve Size: 1/2"~4" (3) 应用等级 Applicable Rating: Class 150/3.6 – 150/10.0
(4) 温度等级 Temperature Rating: Up to 450°C (5) 波纹管密封测试压力 Bellows Test Pressure: 60 psig
(6) 结构特征 Structure Features:
- 连接端类型 End Connection: 螺纹、承插焊或对焊连接端 Threaded, Socket-Welded or Butt-Welded
- 明杆支架，阀盖螺栓连接 Outside Screw & Yoke, Bolted Bonnet ● 楔型 Reduce Bore ● 升杆式／非上升手轮 Rising Stem / Non-Rising Handwheel

FORGED STEEL BELLOWS GATE VALVE – Outside Screw & Yoke, Bolted Bonnet
锻钢波纹管闸阀 – 明杆支架，阀盖螺栓连接

材料标准 STANDARD MATERIALS

零件名称 PART NAMES	材料 MATERIALS
阀体 BODY	法兰 NOTE1
阀盖 BONNET	法兰 NOTE1
阀座 SEAT	ASTM A276 410+HF
阀板 WEDGE	ASTM A276 420
阀杆 STEM	ASTM A276 410
手轮 HANDWHEEL	ASTM A197
填料 PACKING	GRAPHITE
压盖 GLAND	ASTM A276 410
波纹管 BELLOWS	ASTM A240 316

注解NOTE: 1) A105, LF2, F6, F11, F22, F304(L), F316(L), F347, F321, F51, F55, Inconel, Monel, Hastelloy, etc.

技术参数 SPECIFICATIONS

01 设计制造标准 Design & Manufacture Conform to: API 602, MSS-SP 117, ASME B16.34/B16.11/B1.20.1/B16.25
02 阀门尺寸 Valve Size: 1/2"–4"
03 压力等级 Applicable Rating: Class 150LB – 1500LB
04 温度等级 Temperature Rating: Up to 538°C
05 强度测试压力 Bonnet Test Pressure: 30 psig
06 结构特征 Structure Features:
- 连接端类型 End Connection: 焊接、承插焊或对焊连接端 Threaded, Socket-Welded or Butt-Welded
- 明杆支架，阀盖螺栓连接 Outside Screw & Yoke, Bolted Bonnet
- 缩径 Reduce Bore
- 升杆式 / 非上升手轮 Rising Stem / Non-Rising Handwheel

FORGED STEEL FLANGED BELLOWS GATE VALVE – Outside Screw & Yoke, Bolted Bonnet
锻钢法兰连接波纹管闸阀 – 明杆支架，阀盖螺栓连接

材料标准 STANDARD MATERIALS

零件名称 PART NAMES	材料 MATERIALS
阀体 BODY	法兰 NOTE1
阀盖 BONNET	法兰 NOTE1
阀座 SEAT	ASTM A276 410+HF
阀板 WEDGE	ASTM A276 420
阀杆 STEM	ASTM A276 410
垫片 GASKET	304+GRAPHITE
手轮 HANDWHEEL	ASTM A197
填料 PACKING	GRAPHITE
压盖 GLAND	ASTM A276 410
波纹管 BELLOWS	ASTM A240 316

注解NOTE: 1) A105, LF2, F6, F11, F22, F304(L), F316(L), F347, F321, F51, F55, Inconel, Monel, Hastelloy, etc.

技术参数 SPECIFICATIONS

01 设计制造标准 Design & Manufacture Conform to: API 602, MSS-SP 117, ASME B16.34/B16.5
02 阀门尺寸 Valve Size: 1/2"–4"
03 压力等级 Applicable Rating: Class 150LB – 1500LB
04 温度等级 Temperature Rating: Up to 538°C
05 强度测试压力 Bonnet Test Pressure: 30 psig
06 结构特征 Structure Features:
- 连接端类型 End Connection: 法兰连接端 Flanged Type
- 明杆支架，阀盖螺栓连接 Outside Screw & Yoke, Bolted Bonnet
- 缩径 Reduce Bore
- 升杆式 / 非上升手轮 Rising Stem / Non-Rising Handwheel

DERVOS
厦门德沃阀阀门有限公司
Xiamen Dervos Valves Industry Co.,Ltd.

FORGED STEEL EXTENDED GATE VALVE – Outside Screw & Yoke, Bolted Bonnet
锻钢延长盖闸阀 – 明杆支架，阀盖螺栓连接

材料标准 STANDARD MATERIALS

零件名称 PART NAMES	材料 MATERIALS
阀体 BODY	法兰 NOTE1
阀盖 BONNET	法兰 NOTE1
阀座 SEAT	ASTM A276 410+HF
阀板 WEDGE	ASTM A276 420
阀杆 STEM	ASTM A276 410
垫片 GASKET	304+GRAPHITE
手轮 HANDWHEEL	ASTM A197
填料 PACKING	GRAPHITE
压盖 GLAND	ASTM A276 410

注解NOTE: 1) A105, LF2, F6, F11, F22, F304(L), F316(L), F347, F321, F51, F55, Inconel, Monel, Hastelloy, etc.

技术参数 SPECIFICATIONS

01 设计制造标准 Design & Manufacture Conform to: API 602, ASME B16.34/B16.11/B1.20.1
02 阀门尺寸 Valve Size: 1/2"–4"
03 压力等级 Applicable Rating: Class 150LB – 1500LB
04 温度等级 Temperature Rating: Up to 538°C
05 结构特征 Structure Features:
- 连接端类型 End Connection: 螺纹或承插焊连接端 Threaded or Socket-Welded Type　对焊或法兰连接端 Butt-Welded or Flanged Type
- 明杆支架，阀盖螺栓连接 Outside Screw & Yoke, Bolted Bonnet
- 缩径 / 全径 Reduce Bore / Full Bore
- 升杆式 / 非上升手轮 Rising Stem / Non-Rising Handwheel

FORGED STEEL RELEASING MEDIA VALVE – Outside Screw & Yoke, Bolted Bonnet
锻钢放空明闸阀 – 明杆支架，阀盖螺栓连接

材料标准 STANDARD MATERIALS

零件名称 PART NAMES	材料 MATERIALS
阀体 BODY	法兰 NOTE1
阀盖 BONNET	法兰 NOTE1
阀座 SEAT	ASTM A276 410+HF
阀板 WEDGE	ASTM A276 420
阀杆 STEM	ASTM A276 410
垫片 GASKET	304+GRAPHITE
手轮 HANDWHEEL	ASTM A197
填料 PACKING	GRAPHITE
压盖 GLAND	ASTM A276 410

注解NOTE: 1) A105, LF2, F6, F11, F22, F304(L), F316(L), F347, F321, F51, F55, Inconel, Monel, Hastelloy, etc.

技术参数 SPECIFICATIONS

01 设计制造标准 Design & Manufacture Conform to: API 602, ASME B16.34/B16.11/B1.20.1/B16.5
02 阀门尺寸 Valve Size: 1/2"–4"
03 压力等级 Applicable Rating: Class 150LB – 1500LB
04 温度等级 Temperature Rating: Up to 538°C
05 结构特征 Structure Features:
- 连接端类型 End Connection: 螺纹或承插焊连接端 Threaded or Socket-Welded Type　对焊或法兰连接端 Butt-Welded or Flanged Type
- 明杆支架，阀盖螺栓连接 Outside Screw & Yoke, Bolted Bonnet
- 缩径 / 全径 Reduce Bore / Full Bore
- 升杆式 / 非上升手轮 Rising Stem / Non-Rising Handwheel

截止阀 Globe Valve

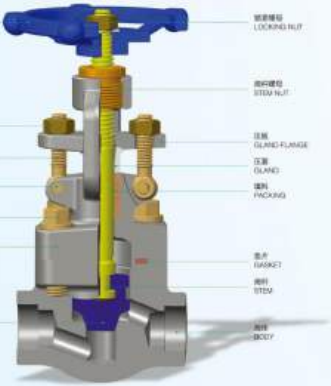

锻造焊接阀有三种结构型式可供选：

(1) 螺栓式阀盖，阀盖体与阀盖用螺栓连接，缠绕式垫片304不锈钢石墨柔性石墨制造或采用金属环压垫密封；

(2) 焊接式阀盖，阀盖体与阀盖用螺栓连接，全焊密封；

(3) 压力自紧式阀盖，其阀体与阀盖用螺栓连接，内压自密封环密封。

Dervos forged steel globe valve is available in three kinds of bonnet design:

(1) Bolted Bonnet: The body and bonnet is connected by bolts with spiral wound gasket (304+graphite) or metal ring sealed;

(2) Welded Bonnet: The body and bonnet is screwed and sealed by welding;

(3) Pressure Sealed Bonnet: The body and bonnet is screwed and sealed by inside pressure self-sealed ring.

FORGED STEEL GLOBE VALVE – Outside Screw & Yoke, Bolted Bonnet
锻钢截止阀 – 明杆支架，螺栓连接

材料标准 STANDARD MATERIALS

零件名称 PART NAMES	材料 MATERIALS	
阀体 BODY	法兰 NOTE1	
阀盖 BONNET	法兰 NOTE1	
阀瓣 DISC	ASTM A105+HF	
阀杆 STEM	ASTM A276 410	
垫片 GASKET	304+GRAPHITE	
手轮 HANDWHEEL	ASTM A197	
填料 PACKING	GRAPHITE	
压盖 GLAND	ASTM A276 410	

注解NOTE: 1) AISI 1025 F6, F11, F22, F304L1, F316L1, F347, F321, F51, F53, F55 Nickel, Monel, Hastelloy, etc.

技术参数 SPECIFICATIONS

(1) 设计制造标准 Design & Manufacture Conform to API 602, ISO9232, ASME B16.34/B16.11/51.20, GB16.20

(2) 阀门尺寸 Valve Size: 1/2"~4" (3) 适用压力 Applicable Rating: Class 150LB ~ 1500LB

(4) 适用温度 Temperature Rating: -29 to 538°C

(5) 结构特征 Structure Features:

★连接端型式 End Connection: 螺纹，承插焊或对焊连接端 Threaded, Socket-Welded or Butt-Welded

★明杆支架，阀盖螺栓连接 Outside Screw & Yoke, Bolted Bonnet ★螺纹 / 全孔 Reduce Bore / Full Bore

★非升杆式 / 上升手轮 Non-Rising Stem / Rising Handwheel

型号 CLASS	尺寸 SIZE (mm)	长度 DIMENSION (mm)		重量 WEIGHT (kg)
		A	全孔 Full Bore	缩孔 Reduce Bore	全孔 Full Bore
150LB	1/2	108	108		3.0
	3/4	117	117		3.5
	1	127	127		4.5
	1 1/4	140	140		6.5
	1 1/2	165	165		8.5
	2	178	178		12.5
	2 1/2	191	191		17.5
	3	203	203		22.5
	4	229	229		32.5
300LB	1/2	140	140		3.5
	3/4	152	152		4.5
	1	165	165		6.5
	1 1/4	178	178		8.5
	1 1/2	191	191		12.5
	2	216	216		17.5
	2 1/2	254	254		22.5
	3	267	267		32.5
	4	305	305		45.5
600LB	1/2	140	140		3.5
	3/4	152	152		4.5
	1	165	165		6.5
	1 1/4	178	178		8.5
	1 1/2	191	191		12.5
	2	216	216		17.5
	2 1/2	254	254		22.5
	3	267	267		32.5
	4	305	305		45.5
900LB	1/2	178	178		5.5
	3/4	191	191		6.5
	1	216	216		8.5
	1 1/4	254	254		12.5
	1 1/2	267	267		17.5
	2	292	292		22.5
	2 1/2	330	330		32.5
	3	356	356		45.5
	4	406	406		65.5
1500LB	1/2	178	178		5.5
	3/4	191	191		6.5
	1	216	216		8.5
	1 1/4	254	254		12.5
	1 1/2	267	267		17.5
	2	292	292		22.5
	2 1/2	330	330		32.5
	3	356	356		45.5
	4	406	406		65.5

FORGED STEEL GLOBE VALVE – Outside Screw & Yoke, Welded Bonnet
锻钢截止阀 – 明杆支架，焊接焊接连接

材料标准 STANDARD MATERIALS

零件名称 PART NAMES	材料 MATERIALS
阀体 BODY	法兰 NOTE1
阀盖 BONNET	法兰 NOTE1
阀瓣 DISC	ASTM A105+HF
阀杆 STEM	ASTM A276 410
手轮 HANDWHEEL	ASTM A197
填料 PACKING	GRAPHITE
压盖 GLAND	ASTM A276 410

注解NOTE: 1) AISI 1025 F6, F11, F22, F304L1, F316L1, F347, F321, F51, F53, F55 Nickel, Monel, Hastelloy, etc.

技术参数 SPECIFICATIONS

(1) 设计制造标准 Design & Manufacture Conform to API 602, ISO9232, ASME B16.34/B16.11/51.20, GB16.20

(2) 阀门尺寸 Valve Size: 1/2"~4" (3) 适用压力 Applicable Rating: Class 150LB ~ 1500LB

(4) 适用温度 Temperature Rating: -29 to 538°C

(5) 结构特征 Structure Features:

★连接端型式 End Connection: 螺纹，承插焊或对焊连接端 Threaded, Socket-Welded or Butt-Welded

★明杆支架，阀盖焊接连接 Outside Screw & Yoke, Welded Bonnet ★螺纹 / 全孔 Reduce Bore / Full Bore

★非升杆式 / 上升手轮 Non-Rising Stem / Rising Handwheel

型号 CLASS	尺寸 SIZE (mm)	长度 DIMENSION (mm)		重量 WEIGHT (kg)
		A	全孔 Full Bore	缩孔 Reduce Bore	全孔 Full Bore
150LB	1/2	108	108		3.0
	3/4	117	117		3.5
	1	127	127		4.5
	1 1/4	140	140		6.5
	1 1/2	165	165		8.5
	2	178	178		12.5
	2 1/2	191	191		17.5
	3	203	203		22.5
	4	229	229		32.5
300LB	1/2	140	140		3.5
	3/4	152	152		4.5
	1	165	165		6.5
	1 1/4	178	178		8.5
	1 1/2	191	191		12.5
	2	216	216		17.5
	2 1/2	254	254		22.5
	3	267	267		32.5
	4	305	305		45.5
600LB	1/2	140	140		3.5
	3/4	152	152		4.5
	1	165	165		6.5
	1 1/4	178	178		8.5
	1 1/2	191	191		12.5
	2	216	216		17.5
	2 1/2	254	254		22.5
	3	267	267		32.5
	4	305	305		45.5
900LB	1/2	178	178		5.5
	3/4	191	191		6.5
	1	216	216		8.5
	1 1/4	254	254		12.5
	1 1/2	267	267		17.5
	2	292	292		22.5
	2 1/2	330	330		32.5
	3	356	356		45.5
	4	406	406		65.5
1500LB	1/2	178	178		5.5
	3/4	191	191		6.5
	1	216	216		8.5
	1 1/4	254	254		12.5
	1 1/2	267	267		17.5
	2	292	292		22.5
	2 1/2	330	330		32.5
	3	356	356		45.5
	4	406	406		65.5

FORGED STEEL Y-GLOBE VALVE – Outside Screw & Yoke, Bolted Bonnet
锻钢Y型截止阀 – 明杆支架，螺栓阀盖

材料标准 STANDARD MATERIALS

零件名称 PART NAMES	材料 MATERIALS
阀体 BODY	注释 NOTE①
阀盖 BONNET	注释 NOTE①
阀座 SEAT	ASTM A105+HF
阀瓣 DISC	ASTM A276 420
阀杆 STEM	ASTM A276 410
垫片 GASKET	304+GRAPHITE
手轮 HANDWHEEL	ASTM A197
填料 PACKING	GRAPHITE
压盖 GLAND	ASTM A276 410

注释NOTE: ① A105, LF2, F5, F11, F22, F304(L), F316(L), F347, F321, F51, F55.
Inconel, Monel, Hastelloy, etc.

技术参数 SPECIFICATIONS

(1) 设计制造标准 Design & Manufacture Conform to: API 600, 6D/602, ASME B16.34/B16.11/B1.20, GB16.25
(2) 阀门尺寸 Valve Size: 1/2"~4" (3) 公称压力 Applicable Rating: Class 150LB ~ 1500LB
(4) 温度等级 Temperature Rating: Up to 538°C
(5) 结构特征 Structure Features:
- 连接端类型 End Connection: 螺纹、承插焊或对焊端连接 Threaded, Socket-Welded or Butt-Welded
- 明杆支架，螺栓阀盖连 Outside Screw & Yoke, Bolted Bonnet ●密封 全孔 Reduce Bore / Full Bore
- 操作形式：上手轮 Non-Rising Stem / Rising Handwheel

压力等级 (ASME) PRESSURE TEST (A105)

等级 CLASS	壳体 SHELL (psig)	上密封 SEAT (psig)	背密 SEAT (psig)
	水 WATER	水 WATER	空气 Air	水 WATER
150LB	450	300	-	300
300LB	1125	825		825
600LB	2225	1650		1650
900LB	3375	2475		2475
1500LB	5625	4125		4125
2500LB	9375	6900		6900

FORGED STEEL GLOBE VALVE – Outside Screw & Yoke, Bolted Bonnet
锻钢截止阀 – 明杆支架，螺栓阀盖

材料标准 STANDARD MATERIALS

零件名称 PART NAMES	材料 MATERIALS
阀体 BODY	注释 NOTE①
阀盖 BONNET	注释 NOTE①
阀座 SEAT	ASTM A105+HF
阀瓣 DISC	ASTM A276 420
阀杆 STEM	ASTM A276 410
垫片 O-RING	304SS
手轮 HANDWHEEL	ASTM A197
填料 PACKING	GRAPHITE
压盖 GLAND	ASTM A276 410

注释NOTE: ① A105, LF2, F5, F11, F22, F304(L), F316(L), F347, F321, F51, F55.
Inconel, Monel, Hastelloy, etc.

技术参数 SPECIFICATIONS

(1) 设计制造标准 Design & Manufacture Conform to: API 600, 6D/602, ASME B16.34/B16.11/B1.20, GB16.25
(2) 阀门尺寸 Valve Size: 1/2"~4" (3) 公称压力 Applicable Rating: Class 150LB ~ 2500LB
(4) 温度等级 Temperature Rating: Up to 538°C
(5) 结构特征 Structure Features:
- 连接端类型 End Connection: 螺纹、承插焊或对焊端连接 Threaded, Socket-Welded or Butt-Welded
- 明杆支架，螺栓阀盖 Outside Screw & Yoke, Bolted Bonnet
- 密封 全孔 Reduce Bore / Full Bore
- 操作形式：上手轮 Non-Rising Stem / Rising Handwheel

压力等级 (ASME) PRESSURE TEST (A105)

等级 CLASS	壳体 SHELL (psig)	上密封 SEAT (psig)	背密 SEAT (psig)
	水 WATER	水 WATER	空气 Air	水 WATER
150LB	450	300	-	300
300LB	1125	825		825
600LB	2225	1650		1650
900LB	3375	2475		2475
1500LB	5625	4125		4125
2500LB	9375	6900		6900

FORGED STEEL Y-GLOBE VALVE – Outside Screw & Yoke, Welded Bonnet
锻钢Y型截止阀 – 明杆支架，焊接阀体连接

材料标准 STANDARD MATERIALS

零件名称 PART NAMES	材料 MATERIALS
阀体 BODY	注释 NOTE①
阀盖 BONNET	注释 NOTE①
阀座 SEAT	ASTM A105+HF
阀瓣 DISC	ASTM A276 420
阀杆 STEM	ASTM A276 410
手轮 HANDWHEEL	ASTM A197
填料 PACKING	GRAPHITE
压盖 GLAND	ASTM A276 410

注释NOTE: ① A105, LF2, F5, F11, F22, F304(L), F316(L), F347, F321, F51, F55.
Inconel, Monel, Hastelloy, etc.

技术参数 SPECIFICATIONS

(1) 设计制造标准 Design & Manufacture Conform to: API 600, 6D/602, ASME B16.34/B16.11/B1.20, GB16.25
(2) 阀门尺寸 Valve Size: 1/2"~4" (3) 公称压力 Applicable Rating: Class 150LB ~ 2500LB
(4) 温度等级 Temperature Rating: Up to 538°C
(5) 结构特征 Structure Features:
- 连接端类型 End Connection: 螺纹、承插焊或对焊端连接 Threaded, Socket-Welded or Butt-Welded
- 明杆支架，螺栓阀盖连 Outside Screw & Yoke, Welded Bonnet ●密封 全孔 Reduce Bore / Full Bore
- 操作形式：上手轮 Non-Rising Stem / Rising Handwheel

压力等级 (ASME) PRESSURE TEST (A105)

等级 CLASS	壳体 SHELL (psig)	上密封 SEAT (psig)	背密 SEAT (psig)
	水 WATER	水 WATER	空气 Air	水 WATER
150LB	450	300	-	300
300LB	1125	825		825
600LB	2225	1650		1650
900LB	3375	2475		2475
1500LB	5625	4125		4125
2500LB	9375	6900		6900

FORGED STEEL GLOBE VALVE – Outside Screw & Yoke, Pressure-Seal Bonnet
锻钢截止阀 – 明杆支架，压力自紧式密封阀盖

材料标准 STANDARD MATERIALS

零件名称 PART NAMES	材料 MATERIALS
阀体 BODY	注释 NOTE①
阀盖 BONNET	注释 NOTE①
阀座 SEAT	ASTM A105+HF
阀瓣 DISC	ASTM A276 420
阀杆 STEM	ASTM A276 410
密封阀座 P.O.SEAT	304SS
手轮 HANDWHEEL	ASTM A197
填料 PACKING	GRAPHITE
压盖 GLAND	ASTM A276 410

注释NOTE: ① A105, LF2, F5, F11, F22, F304(L), F316(L), F347, F321, F51, F55.
Inconel, Monel, Hastelloy, etc.

技术参数 SPECIFICATIONS

(1) 设计制造标准 Design & Manufacture Conform to: API 600, 6D/602, ASME B16.34/B16.11/B1.20, GB16.25
(2) 阀门尺寸 Valve Size: 1/2"~4" (3) 公称压力 Applicable Rating: Class 150LB ~ 2500LB
(4) 温度等级 Temperature Rating: Up to 538°C
(5) 结构特征 Structure Features:
- 连接端类型 End Connection: 螺纹、承插焊或对焊端连接 Threaded, Socket-Welded or Butt-Welded
- 明杆支架，压力自紧式密封阀盖 Outside Screw & Yoke, Pressure-Seal Bonnet
- 密封 全孔 Reduce Bore / Full Bore
- 操作形式：上手轮 Non-Rising Stem / Rising Handwheel

压力等级 (ASME) PRESSURE TEST (A105)

等级 CLASS	壳体 SHELL (psig)	上密封 SEAT (psig)	背密 SEAT (psig)
	水 WATER	水 WATER	空气 Air	水 WATER
150LB	450	300	-	300
300LB	1125	825		825
600LB	2225	1650		1650
900LB	3375	2475		2475
1500LB	5625	4125		4125
2500LB	9375	6900		6900

FORGED STEEL FLANGED GLOBE VALVE – Outside Screw & Yoke, Bolted Bonnet

锻钢法兰连接截止阀 – 明杆支架，螺盖螺栓连接

材料标准 STANDARD MATERIALS

零件名称 PART NAMES	材料 MATERIALS
阀体 BODY	注释 NOTE①
阀盖 BONNET	注释 NOTE①
阀座 SEAT	ASTM A105+HF
阀瓣 DISC	ASTM A276 420
阀杆 STEM	ASTM A276 410
垫片 GASKET	304+GRAPHITE
手轮 HANDWHEEL	ASTM A197
填料 PACKING	GRAPHITE
压盖 GLAND	ASTM A276 410

注释NOTE: ① A105, LF2, F5, F11, F22, F304(L), F316(L), F347, F321, F51, F53, Monel, Nickel, Hastelloy, etc.

压力测验 (ANSI) PRESSURE TEST (ATOS)

阀级 CLASS	壳体 BODY (psig)	密封 SEAT (psig)	阀盖 SEAT (psig)
150LB	450	320	320
300LB	1125	825	825
600LB	2250	1650	1650
900LB	3375	2475	2475
1500LB	5625	4125	4125
2500LB	9375	6900	6900

技术参数 SPECIFICATIONS

① 设计和制造标准 Design & Manufacture Conform to: API 602, ISO3262, ASME B16.34/B16.5

② 阀门尺寸 Valve Size: 1/2"~4" ③ 公称压力 Applicable Rating: Class 150LB ~ 1500LB

④ 适用温度 Temperature Rating: Up to 538℃

⑤ 结构特征 Structure Features:

- 连接端类型 End Connection: 法兰连接端 Flanged Type
- 明杆支架，螺盖螺栓连接 Outside Screw & Yoke, Bolted Bonnet
- 螺纹 Rising Stem
- 手动操作或上升手轮 Non-Rising Stem / Rising Handwheel

DERVOS
厦门德沃阀阀门制造股份有限公司
Xiamen Dervos Valves Industry Co.,Ltd.

FORGED STEEL FLANGED GLOBE VALVE – Outside Screw & Yoke, Bolted Bonnet

锻钢法兰连接截止阀 – 明杆支架，螺盖螺栓连接

材料标准 STANDARD MATERIALS

零件名称 PART NAMES	材料 MATERIALS
阀体 BODY	注释 NOTE①
阀盖 BONNET	注释 NOTE①
阀座 SEAT	ASTM A105+HF
阀瓣 DISC	ASTM A276 420
阀杆 STEM	ASTM A276 410
垫片 GASKET	304+GRAPHITE
手轮 HANDWHEEL	ASTM A197
填料 PACKING	GRAPHITE
压盖 GLAND	ASTM A276 410

注释NOTE: ① A105, LF2, F5, F11, F22, F304(L), F316(L), F347, F321, F51, F53, Monel, Nickel, Hastelloy, etc.

技术参数 SPECIFICATIONS

① 设计和制造标准 Design & Manufacture Conform to: API 602, ISO3262, ASME B16.34/B16.5

② 阀门尺寸 Valve Size: 1/2"~4" ③ 公称压力 Applicable Rating: Class 150LB ~ 1500LB

④ 适用温度 Temperature Rating: Up to 538℃

⑤ 结构特征 Structure Features:

- 连接端类型 End Connection: 法兰连接端 Flanged Type
- 明杆支架，螺盖螺栓连接 Outside Screw & Yoke, Bolted Bonnet
- 螺纹 Rising Stem
- 手动操作或上升手轮 Non-Rising Stem / Rising Handwheel

压力测验 (ANSI) PRESSURE TEST (ATOS)

阀级 CLASS	壳体 BODY (psig)	密封 SEAT (psig)	阀盖 SEAT (psig)
150LB	450	320	320
300LB	1125	825	825
600LB	2250	1650	1650
900LB	3375	2475	2475
1500LB	5625	4125	4125
2500LB	9375	6900	6900

FORGED STEEL FLANGED GLOBE VALVE – Outside Screw & Yoke, Bolted Bonnet

锻钢法兰连接截止阀 – 明杆支架，螺盖螺栓连接

材料标准 STANDARD MATERIALS

零件名称 PART NAMES	材料 MATERIALS
阀体 BODY	注释 NOTE①
阀盖 BONNET	注释 NOTE①
阀座 SEAT	ASTM A105+HF
阀瓣 DISC	ASTM A276 420
阀杆 STEM	ASTM A276 410
垫片 GASKET	304+GRAPHITE
手轮 HANDWHEEL	ASTM A197
填料 PACKING	GRAPHITE
压盖 GLAND	ASTM A276 410

注释NOTE: ① A105, LF2, F5, F11, F22, F304(L), F316(L), F347, F321, F51, F53, Monel, Nickel, Hastelloy, etc.

压力测验 (ANSI) PRESSURE TEST (ATOS)

阀级 CLASS	壳体 BODY (psig)	密封 SEAT (psig)	阀盖 SEAT (psig)
150LB	450	320	320
300LB	1125	825	825
600LB	2250	1650	1650
900LB	3375	2475	2475
1500LB	5625	4125	4125
2500LB	9375	6900	6900

技术参数 SPECIFICATIONS

① 设计和制造标准 Design & Manufacture Conform to: API 602, ISO3262, ASME B16.34/B16.5

② 阀门尺寸 Valve Size: 1/2"~4" ③ 公称压力 Applicable Rating: Class 150LB ~ 1500LB

④ 适用温度 Temperature Rating: Up to 538℃

⑤ 结构特征 Structure Features:

- 连接端类型 End Connection: 法兰连接端 Flanged Type
- 明杆支架，螺盖螺栓连接 Outside Screw & Yoke, Bolted Bonnet
- 螺纹 Rising Stem
- 手动操作或上升手轮 Non-Rising Stem / Rising Handwheel

FORGED STEEL CRYOGENIC GLOBE VALVE – Outside Screw & Yoke, Bolted Bonnet

锻钢低温截止阀 – 明杆支架，螺盖螺栓连接

材料标准 STANDARD MATERIALS

零件名称 PART NAMES	材料 MATERIALS
阀体 BODY	注释 NOTE①
阀盖 BONNET	注释 NOTE①
阀座 SEAT	ASTM A276 304(L)/316(L)+HF
阀瓣 DISC	ASTM A276 304(L)/316(L)
阀杆 STEM	ASTM A276 304(L)/316(L)
垫片 GASKET	304+GRAPHITE
手轮 HANDWHEEL	ASTM A197
填料 PACKING	GRAPHITE
压盖 GLAND	ASTM A276 304(L)/316(L)

注释NOTE: ① F304(L), F316(L)

技术参数 SPECIFICATIONS

① 设计和制造标准 Design & Manufacture Conform to: API 602, ISO3834, MSS SP-134, ASME B16.34/B16.5/B31.3/GB150.3

② 阀门尺寸 Valve Size: 1/2"~4" ③ 公称压力 Applicable Rating: Class 150LB ~ 1500LB

④ 适用温度 Temperature Rating: Down to -196℃

⑤ 结构特征 Structure Features:

- 连接端类型 End Connection: 螺纹，焊接端 Threaded, Socket-Welded or Butt-Welded
- 加长型 Long Extended Bonnet
- 操作，手轮 Actuator, Handwheel
- 防火型 / 防静电设计 Fire Safety / Anti-static Design
- 压力平衡型 / 压力平衡设计 Pressure Relief Design (Pressure Balance Design)
- 上升手轮 Rising Handwheel

FORGED STEEL FLANGED CRYOGENIC GLOBE VALVE – Outside Screw & Yoke, Bolted Bonnet

锻钢法兰连接低温截止阀 – 明杆支架, 阀盖螺栓连接

材料标准 STANDARD MATERIALS

零件名称 PART NAMES	材料 MATERIALS
阀体 BODY	注明 NOTE①
阀盖 BONNET	注明 NOTE①
阀座 SEAT	ASTM A276 304L/316L+HF
阀瓣 DISC	ASTM A276 304L/316L
阀杆 STEM	ASTM A276 304L/316L
垫片 GASKET	304+GRAPHITE
手轮 HANDWHEEL	ASTM A197
填料 PACKING	GRAPHITE
压盖 GLAND	ASTM A276 304L/316L

注解NOTE: 2.4546, 1.4529, F11, F22, F304L/L, F316L/L, F347, F321, F51, F55, Inconel, Monel, Hastelloy etc.

技术参数 SPECIFICATIONS

01 设计制造标准 Design & Manufacture Conform to: API 602, BS5351, MSS-SP-134, ASME B16.34/B16.5

02 通口尺寸 Valve Size: 1/2"~4" 03 适用等级 Applicable Rating: Class 150LB ~ 1500LB

04 温度等级 Temperature Rating: Down to –196°C

05 结构特征 Structure Features:

- 连接端类型 End Connection: 法兰连接端 Flanged Type
- 加长型 Long Extended Bonnet
- 手轮 / 手柄 Actuator: Handwheel
- 防火 / 防静电设计 Fire Safety / Anti-static Design
- 压力释放设计 (无内平衡设计) Pressure Relief Design (Pressure Balance Design)
- 上开平阀 Rising Handwheel

FORGED STEEL BELLOWS GLOBE VALVE – Outside Screw & Yoke, Bolted Bonnet

锻钢波纹管截止阀 – 明杆支架, 阀盖螺栓连接

材料标准 STANDARD MATERIALS

零件名称 PART NAMES	材料 MATERIALS
阀体 BODY	注明 NOTE①
阀盖 BONNET	注明 NOTE①
阀座 SEAT	ASTM A105+HF
阀瓣 DISC	ASTM A276 410
阀杆 STEM	ASTM A276 410
垫片 GASKET	304+GRAPHITE
手轮 HANDWHEEL	ASTM A197
填料 PACKING	GRAPHITE
压盖 GLAND	ASTM A276 410
波纹管 BELLOWS	ASTM A240 316

注解NOTE: 2.4546, 1.4529, F11, F22, F304L/L, F316L/L, F347, F321, F51, F55, Inconel, Monel, Hastelloy etc.

技术参数 SPECIFICATIONS

01 设计制造标准 Design & Manufacture Conform to: API 602, MSS-SP-117, ASME B16.34/B16.10/B16.20/B16.25

02 通口尺寸 Valve Size: 1/2"~4" 03 适用等级 Applicable Rating: Class 150LB ~ 900LB

04 温度等级 Temperature Rating: Up to 538°C 05 波纹管密封压力 Bellows Test Pressure: 90 psig

06 结构特征 Structure Features:

- 连接端类型 End Connection: 螺纹, 承插焊或对焊连接端 Threaded, Socket-Welded or Butt-Welded
- 明杆支架, 阀盖螺栓连接 Outside Screw & Yoke, Bolted Bonnet
- 缩径 Reduce Bore
- 升杆式非上开平阀 Rising Stem / Non-Rising Handwheel

FORGED STEEL BELLOWS GLOBE VALVE – Outside Screw & Yoke, Welded Bonnet

锻钢波纹管截止阀 – 明杆支架, 阀盖焊接连接

材料标准 STANDARD MATERIALS

零件名称 PART NAMES	材料 MATERIALS
阀体 BODY	注明 NOTE①
阀盖 BONNET	注明 NOTE①
阀座 SEAT	ASTM A105+HF
阀瓣 DISC	ASTM A276 410
阀杆 STEM	ASTM A276 410
垫片 GASKET	304+GRAPHITE
手轮 HANDWHEEL	ASTM A197
填料 PACKING	GRAPHITE
压盖 GLAND	ASTM A276 410
波纹管 BELLOWS	ASTM A240 316

注解NOTE: 2.4546, 1.4529, F11, F22, F304L/L, F316L/L, F347, F321, F51, F55, Inconel, Monel, Hastelloy etc.

技术参数 SPECIFICATIONS

01 设计制造标准 Design & Manufacture Conform to: API 602, MSS-SP-117, ASME B16.34/B16.5

02 通口尺寸 Valve Size: 1/2"~4" 03 适用等级 Applicable Rating: Class 150LB ~ 900LB

04 温度等级 Temperature Rating: Up to 538°C 05 波纹管密封压力 Bellows Test Pressure: 90 psig

06 结构特征 Structure Features:

- 连接端类型 End Connection: 法兰连接端 Flanged Type
- 明杆支架, 阀盖焊接连接 Outside Screw & Yoke, Welded Bonnet
- 缩径 Reduce Bore
- 升杆式非上开平阀 Rising Stem / Non-Rising Handwheel

FORGED STEEL FLANGED BELLOWS GLOBE VALVE – Outside Screw & Yoke, Bolted Bonnet

锻钢法兰连接波纹管截止阀 – 明杆支架, 阀盖螺栓连接

材料标准 STANDARD MATERIALS

零件名称 PART NAMES	材料 MATERIALS
阀体 BODY	注明 NOTE①
阀盖 BONNET	注明 NOTE①
阀座 SEAT	ASTM A105+HF
阀瓣 WEDGE	ASTM A276 410
阀杆 STEM	ASTM A276 410
垫片 GASKET	304+GRAPHITE
手轮 HANDWHEEL	ASTM A197
填料 PACKING	304+GRAPHITE
压盖 GLAND	ASTM A276 410
波纹管 BELLOWS	ASTM A240 316

注解NOTE: 2.4546, 1.4529, F11, F22, F304L/L, F316L/L, F347, F321, F51, F55, Inconel, Monel, Hastelloy etc.

技术参数 SPECIFICATIONS

01 设计制造标准 Design & Manufacture Conform to: API 602, MSS-SP-117, ASME B16.34/B16.5

02 通口尺寸 Valve Size: 1/2"~4" 03 适用等级 Applicable Rating: Class 150LB ~ 900LB

04 温度等级 Temperature Rating: Up to 538°C 05 波纹管密封压力 Bellows Test Pressure: 90 psig

06 结构特征 Structure Features:

- 连接端类型 End Connection: 法兰连接端 Flanged Type
- 明杆支架, 阀盖螺栓连接 Outside Screw & Yoke, Bolted Bonnet
- 缩径 Reduce Bore
- 升杆式非上开平阀 Rising Stem / Non-Rising Handwheel

止回阀 Check Valve

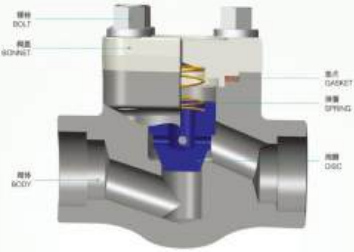

阀门采用锻钢上回阀两三种阀盖设计形式：

(1) 螺栓式阀盖，适用于高温压力容器，螺栓式垫片为304不锈钢缠绕石墨垫，特别适用于要求可高压金属环垫密封。

(2) 焊接式阀盖，适用于高温压力容器，全焊密封。

(3) 压力自紧式阀盖，适用于高温压力容器，也可以密封可靠性。

螺栓式和焊接式两种结构设计结构，它们是可拆式结构，螺栓式和焊接式是可以互换。

Check forged steel check valve is available in three kinds of bonnet designs:

(1) Bolted Bonnet: The body and bonnet is connected by bolts with spiral wound gasket (304+graphite) or metal ring sealed Metal ring connected is available on customer' s request.

(2) Welded Bonnet: The body and bonnet is screwed and sealed by welding.

(3) Pressure Sealed Bonnet: The body and bonnet is screwed and sealed by inside pressure self-sealed ring.

The check valves are designed with three different kinds of structure. They are Lift Check Valve, Ball Check Valve and Swing Check Valve.

DERVOS
厦门德沃阀门有限股份有限公司
Xiamen Dervos Valves Industry Co.,Ltd.

FORGED STEEL LIFT CHECK VALVE – Bolted Cover
锻钢升降式止回阀 – 螺栓固定盖

材料标准 STANDARD MATERIALS

零件名称 PART NAMES	材料 MATERIALS
阀体 BODY	注释 NOTE①
阀盖 BONNET	注释 NOTE①
阀座 SEAT	ASTM A105+HF
阀瓣 DISC	ASTM A276 420
垫片 GASKET	304+GRAPHITE
阀盖螺栓 DOBER BOLT	ASTM A193 B7

注释NOTE: ① A 105, LF2, F11, F22, F304(L), F316(L), F347, F321, F51, F55, Nickel, Monel, Hastelloy, etc.

阀级 CLASS	阀体 BODY (mm)		阀盖 BONNET (mm)		阀座 TEST (mm)	
	A	B MATERIAL	A	B MATERIAL	密封 SEAT	A
150LB	45					30
300LB	110					50
600LB	110					50
800LB	200					2170
900LB	200					3400
1500LB	2070					4100
2500LB	3070					6400

技术参数 SPECIFICATIONS

(1) 设计制造标准 Design & Manufacture Conform to: API 602, BS5352, ASME B16.34/B16.11/BS 5352/BS 5146

(2) 额定压力 Valve Size: 1/2"~4" (3) 应用范围 Application Rating: Class 150LB – 2500LB

(4) 温度范围 Temperature Rating: Up to 538℃

(5) 结构特性 Structure Features

- 连接端形式 End Connection: 螺纹、承插焊或对焊连接端 Threaded, Socket-Welded or Butt-Welded
- 螺栓连接盖 Bolted Cover
- 通孔 / 全孔 Reduce Bore / Full Bore

FORGED STEEL LIFT CHECK VALVE – Welded Cover
锻钢升降式止回阀 – 焊接连接

材料标准 STANDARD MATERIALS

零件名称 PART NAMES	材料 MATERIALS
阀体 BODY	注释 NOTE①
阀盖 BONNET	注释 NOTE①
阀座 SEAT	ASTM A105+HF
阀瓣 DISC	ASTM A276 420

注释NOTE: ① A 105, LF2, F11, F22, F304(L), F316(L), F347, F321, F51, F55, Nickel, Monel, Hastelloy, etc.

阀级 CLASS	阀体 BODY (mm)		阀盖 BONNET (mm)		阀座 TEST (mm)	
	A	B MATERIAL	A	B MATERIAL	密封 SEAT	A
150LB	45					30
300LB	110					50
600LB	110					50
800LB	200					2170
900LB	200					3400
1500LB	2070					4100
2500LB	3070					6400

技术参数 SPECIFICATIONS

(1) 设计制造标准 Design & Manufacture Conform to: API 602, BS5352, ASME B16.34/B16.11/BS 5352/BS 5146

(2) 额定压力 Valve Size: 1/2"~4" (3) 应用范围 Application Rating: Class 150LB – 2500LB

(4) 温度范围 Temperature Rating: Up to 538℃

(5) 结构特性 Structure Features

- 连接端形式 End Connection: 螺纹、承插焊或对焊连接端 Threaded, Socket-Welded or Butt-Welded
- 焊接连接盖 Welded Cover
- 通孔 / 全孔 Reduce Bore / Full Bore

FORGED STEEL LIFT CHECK VALVE – Pressure-Seal Cover
锻钢升降式止回阀 – 压力自紧式密封阀盖

材料标准 STANDARD MATERIALS

零件名称 PART NAMES	材料 MATERIALS
阀体 BODY	注明 NOTE(1)
阀盖 BONNET	注明 NOTE(1)
阀座 SEAT	ASTM A105+HF
阀瓣 DISC	ASTM A276 420
密封垫圈 P.S.SEAT	304SS

注明NOTE: (1) A105, LF2, F5, F11, F22, F304(L), F316(L), F347, F321, F51, F53, Incoloy, Monel, Hastelloy, etc.

技术参数 SPECIFICATIONS

(1) 设计制造标准 Design & Manufacture Conform to: API 602, ISO5352, ASME B16.34/B16.11/API 20, B16.25
(2) 阀门尺寸 Valve Size: 1/2"–4" (3) 公称等级 Applicable Rating: Class 150/300 – 2500/LB
(4) 温度等级 Temperature Rating: Up to 650°F
(5) 结构特征 Structure Features:
- 连接端形式 End Connection: 螺纹、承插焊或对焊端直接 Threaded, Socket-Welded or Butt-Welded
- 压力自紧式密封阀盖 Pressure-Seal Cover
- 全孔 / 全径 Reduce Bore / Full Bore

型号 CLASS	阀体 BODY (mm)	阀盖 BONNET (mm)	密封 SEAT (mm)
	A	A	A
150LB	30%	–	–	4 100
300LB	40%			6600

FORGED STEEL BALL CHECK VALVE – Bolted Cover
锻钢球式止回阀 – 螺栓固定盖

材料标准 STANDARD MATERIALS

零件名称 PART NAMES	材料 MATERIALS
阀体 BODY	注明 NOTE(1)
阀盖 BONNET	注明 NOTE(1)
阀座 SEAT	ASTM A105+HF
球体 BALL	ASTM A276 316
垫片 GASKET	304+GRAPHITE
螺栓 COVER BOLT	ASTM A193 B7

注明NOTE: (1) A105, LF2, F5, F11, F22, F304(L), F316(L), F347, F321, F51, F53, Incoloy, Monel, Hastelloy, etc.

型号 CLASS	阀体 BODY (mm)	阀盖 BONNET (mm)	密封 SEAT (mm)
	A	A	A
150LB	40%			300
300LB	1100			3600
600LB	1000	–	–	3600
900LB	3000			3170
1500LB	2000			3400
2500LB	3000			4100

技术参数 SPECIFICATIONS

(1) 设计制造标准 Design & Manufacture Conform to: API 602, ISO5352, ASME B16.34/B16.11/API 20, B16.25
(2) 阀门尺寸 Valve Size: 1/2"–4" (3) 公称等级 Applicable Rating: Class 150/LB – 2500/LB
(4) 温度等级 Temperature Rating: Up to 650°F
(5) 结构特征 Structure Features:
- 连接端形式 End Connection: 螺纹、承插焊或对焊端直接 Threaded, Socket-Welded or Butt-Welded
- 螺栓固定盖 Bolted Cover - 全孔 / 全径 Reduce Bore / Full Bore

FORGED STEEL LIFT CHECK VALVE – Bolted Cover
锻钢升降式止回阀 – 螺栓固定盖

材料标准 STANDARD MATERIALS

零件名称 PART NAMES	材料 MATERIALS
阀体 BODY	注明 NOTE(1)
阀盖 BONNET	注明 NOTE(1)
阀座 SEAT	ASTM A105+HF
阀瓣 DISC	ASTM A276 420
密封 P.S.SEAT	304SS
螺栓 COVER BOLT	ASTM A193 B7

注明NOTE: (1) A105, LF2, F5, F11, F22, F304(L), F316(L), F347, F321, F51, F53, Incoloy, Monel, Hastelloy, etc.

技术参数 SPECIFICATIONS

(1) 设计制造标准 Design & Manufacture Conform to: API 602, ISO5352, ASME B16.34/B16.11/API 20, B16.25
(2) 阀门尺寸 Valve Size: 1/2"–4" (3) 公称等级 Applicable Rating: Class 150/LB – 2500/LB
(4) 温度等级 Temperature Rating: Up to 650°F
(5) 结构特征 Structure Features:
- 连接端形式 End Connection: 螺纹、承插焊或对焊端直接 Threaded, Socket-Welded or Butt-Welded
- 螺栓固定盖 Bolted Cover - 全孔 / 全径 Reduce Bore / Full Bore

型号 CLASS	阀体 BODY (mm)	阀盖 BONNET (mm)	密封 SEAT (mm)
	A	A	A
150LB	30%	–	–	4 100
300LB	40%			6600

FORGED STEEL Y-CHECK VALVE – Bolted Cover
锻钢Y型止回阀 – 螺栓固定盖

材料标准 STANDARD MATERIALS

零件名称 PART NAMES	材料 MATERIALS
阀体 BODY	注明 NOTE(1)
阀盖 BONNET	注明 NOTE(1)
阀座 SEAT	ASTM A105+HF
阀瓣 DISC	ASTM A276 316
垫片 GASKET	304+GRAPHITE
螺栓 COVER BOLT	ASTM A193 B7

注明NOTE: (1) A105, LF2, F5, F11, F22, F304(L), F316(L), F347, F321, F51, F53, Incoloy, Monel, Hastelloy, etc.

型号 CLASS	阀体 BODY (mm)	阀盖 BONNET (mm)	密封 SEAT (mm)
	A	A	A
150LB	40%			300
300LB	1100			3600
600LB	1000	–	–	3600
900LB	3000			3170
1500LB	2000			3400
2500LB	3000			4100

技术参数 SPECIFICATIONS

(1) 设计制造标准 Design & Manufacture Conform to: API 602, ISO5352, ASME B16.34/B16.11/API 20, B16.25
(2) 阀门尺寸 Valve Size: 1/2"–4" (3) 公称等级 Applicable Rating: Class 150/LB – 2500/LB
(4) 温度等级 Temperature Rating: Up to 650°F
(5) 结构特征 Structure Features:
- 连接端形式 End Connection: 螺纹、承插焊或对焊端直接 Threaded, Socket-Welded or Butt-Welded
- 螺栓固定盖 Bolted Cover - 全孔 / 全径 Reduce Bore / Full Bore

FORGED STEEL Y-CHECK VALVE – Welded Cover
锻钢Y型止回阀 – 阀盖焊接连接

材料标准 STANDARD MATERIALS

零件名称 PARTS NAMES	材料 MATERIALS
阀体 BODY	注明 NOTED
阀盖 BONNET	注明 NOTED
阀座 SEAT	ASTM A105+HF
阀瓣 DISC	ASTM A276 410
垫片 GASKET	304+GRAPHITE
螺栓 COVER BOLT	ASTM A193 B7
法兰 FLTRTS SCREWS	ASTM A193 B8

注释NOTE: 工:A105, LF2, F5, F11, F22, F304(L), F316(L), F347, F321, F51, F53, F55, Inconel, Monel, Hastelloy, etc.

压力等级	公称尺寸			
阀门	阀体	阀盖	阀瓣	阀杆
150LB	400			300
300LB	1100			600
600LB	2000			1800
900LB	3000	-	-	2170
1500LB	3000			3400
2500LB	3570			4100

技术参数 SPECIFICATIONS

- 设计制造标准 Design & Manufacture Conform to: API 602, 5000/22, ASME B16.34/B16.11/B1.20.1/B16.25
- 阀门尺寸 Valve Size: 1/2"~4" 适用等级 Applicable Rating: Class 150LB ~ 2500LB
- 工作温度等级 Temperature Rating: Up to 650°C
- 结构特征 Structure Features:
  - 连接端类型 End Connection: 螺纹、承插焊或对焊端连接端 Threaded, Socket-Welded or Butt-Welded
  - 阀盖焊接连接 Welded Cover
  - 填料 / 全密 Packing Seal / Full Bore

FORGED STEEL FLANGED LIFT CHECK VALVE – Bolted Cover
锻钢法兰连接升降式止回阀 – 螺栓固定盖

材料标准 STANDARD MATERIALS

零件名称 PARTS NAMES	材料 MATERIALS
阀体 BODY	注明 NOTED
阀盖 BONNET	注明 NOTED
阀座 SEAT	ASTM A105+HF
阀瓣 DISC	ASTM A276 410
垫片 GASKET	304+GRAPHITE
螺栓 COVER BOLT	ASTM A193 B7

注释NOTE: 工:A105, LF2, F5, F11, F22, F304(L), F316(L), F347, F321, F51, F53, F55, Inconel, Monel, Hastelloy, etc.

压力等级	公称尺寸			
阀门	阀体	阀盖	阀瓣	阀杆
150LB	400			300
300LB	1100			600
600LB	2000			1800
900LB	3000	-	-	2170
1500LB	3000			3400
2500LB	3570			4100

技术参数 SPECIFICATIONS

- 设计制造标准 Design & Manufacture Conform to: API 602, 5000/22, ASME B16.34/B16.5
- 阀门尺寸 Valve Size: 1/2"~4" 适用等级 Applicable Rating: Class 150LB ~ 1500LB
- 工作温度等级 Temperature Rating: Up to 650°C
- 结构特征 Structure Features:
  - 连接端类型 End Connection: 法兰连接端 Flanged Type
  - 螺栓固定盖 Bolted Cover
  - 填料 Packing Seal

FORGED STEEL Y-TYPE STRAINER VALVE – Bolted Cover
锻钢Y型过滤器 – 螺栓固定盖

材料标准 STANDARD MATERIALS

零件名称 PARTS NAMES	材料 MATERIALS
阀体 BODY	注明 NOTED
阀盖 BONNET	注明 NOTED
垫片 GASKET	304+GRAPHITE
螺栓 COVER BOLT	ASTM A193 B7
法兰 FLTRTS SCREWS	ASTM A193 B8

注释NOTE: 工:A105, LF2, F5, F11, F22, F304(L), F316(L), F347, F321, F51, F53, F55, Inconel, Monel, Hastelloy, etc.

压力等级	公称尺寸			
阀门	阀体	阀盖	阀瓣	阀杆
150LB	400			300
300LB	1100			600
600LB	2000			1800
900LB	3000	-	-	-
1500LB	3000			
2500LB	3570			

技术参数 SPECIFICATIONS

- 设计制造标准 Design & Manufacture Conform to: API 602, 5000/22, ASME B16.34/B16.11/B1.20.1/B16.25
- 阀门尺寸 Valve Size: 1/2"~4" 适用等级 Applicable Rating: Class 150LB ~ 2500LB
- 工作温度等级 Temperature Rating: Up to 650°C
- 结构特征 Structure Features:
  - 连接端类型 End Connection: 螺纹、承插焊或对焊端连接端 Threaded, Socket-Welded or Butt-Welded
  - 螺栓固定盖 Bolted Cover
  - 填料 / 全密 Packing Seal / Full Bore

FORGED STEEL FLANGED LIFT CHECK VALVE – Bolted Cover
锻钢法兰连接升降式止回阀 – 螺栓固定盖

材料标准 STANDARD MATERIALS

零件名称 PARTS NAMES	材料 MATERIALS
阀体 BODY	注明 NOTED
阀盖 BONNET	注明 NOTED
阀座 SEAT	ASTM A105+HF
阀瓣 DISC	ASTM A276 410
垫片 GASKET	304+GRAPHITE
螺栓 COVER BOLT	ASTM A193 B7

注释NOTE: 工:A105, LF2, F5, F11, F22, F304(L), F316(L), F347, F321, F51, F53, F55, Inconel, Monel, Hastelloy, etc.

压力等级	公称尺寸			
阀门	阀体	阀盖	阀瓣	阀杆
150LB	400			300
300LB	1100			600
600LB	2000			1800
900LB	3000	-	-	2170
1500LB	3000			3400
2500LB	3570			4100

技术参数 SPECIFICATIONS

- 设计制造标准 Design & Manufacture Conform to: API 602, 5000/22, ASME B16.34/B16.5
- 阀门尺寸 Valve Size: 1/2"~4" 适用等级 Applicable Rating: Class 150LB ~ 1500LB
- 工作温度等级 Temperature Rating: Up to 650°C
- 结构特征 Structure Features:
  - 连接端类型 End Connection: 法兰连接端 Flanged Type
  - 螺栓固定盖 Bolted Cover
  - 填料 Packing Seal

FORGED STEEL FLANGED LIFT CHECK VALVE – Bolted Cover
锻钢法兰连接升降式止回阀 – 螺栓固定盖

材料标准 STANDARD MATERIALS

零件名称 PART NAMES	材料 MATERIALS
阀体 BODY	注明 NOTE①
阀盖 BONNET	注明 NOTE①
阀座 SEAT	ASTM A105+HF
阀瓣 DISC	ASTM A276 420
垫片 GASKET	304SS
螺栓 COVER BOLT	ASTM A193 B7
螺母 NUT	304SS

注解NOTE: ① A105, LF2, F6, F11, F22, F304(L), F316(L), F347, F321, F51, F55, F60, Monel, Monel / Hastelloy, etc.

技术参数 SPECIFICATIONS

① 设计制造标准 Design & Manufacture Conform to: API 602, 3000SC, ASME B16.34/B16.5

② 阀门尺寸 Valve Size: 1/2"~4" ③ 公称等级 Applicable Rating: Class 150SLB ~ 2500SLB

④ 温度等级 Temperature Rating: Up to 500°C

⑤ 结构特征 Structure Features:

- 连接端形式 End Connection: 法兰连接端 Flanged Type ● 螺栓固定盖 Bolted Cover
- 缩径 Reduce Bore

压力试验 (MPa) PRESSURE TEST (MPa)				
级别 CLASS	壳体 BODY (20°C, 20min)	密封 SEAT (20°C, 20min)	氮气 Gas (20°C, 20min)	保压 Hold (20°C)
	A (MPa)	A (MPa)	氮气 Gas	A (MPa)
150LB	3.0	-	-	2.120
300LB	8.0			5.850

FORGED STEEL SWING CHECK VALVE – Bolted Cover
锻钢摇动式止回阀 – 螺栓固定盖

材料标准 STANDARD MATERIALS

零件名称 PART NAMES	材料 MATERIALS
阀体 BODY	注明 NOTE①
阀盖 BONNET	注明 NOTE①
阀座 SEAT	ASTM A105+HF
阀瓣 DISC	ASTM A276 420
垫片 GASKET	304+GRAPHITE
螺栓 COVER BOLT	ASTM A193 B7
螺母 NUT	ASTM A194 2H

注解NOTE: ① A105, LF2, F6, F11, F22, F304(L), F316(L), F347, F321, F51, F55, F60, Monel, Monel / Hastelloy, etc.

技术参数 SPECIFICATIONS

① 设计制造标准 Design & Manufacture Conform to: API 602, 3000SC, ASME B16.34/B16.5

② 阀门尺寸 Valve Size: 1/2"~4" ③ 公称等级 Applicable Rating: Class 150SLB ~ 1500SLB

④ 温度等级 Temperature Rating: Up to 500°C

⑤ 结构特征 Structure Features:

- 连接端形式 End Connection: 螺纹、承插焊或对焊端连接 Threaded, Socket-Welded or Butt-Welded
- 螺栓固定盖 Bolted Cover ● 缩径 / 全径 Reduce Bore / Full Bore

压力试验 (MPa) PRESSURE TEST (MPa)				
级别 CLASS	壳体 BODY (20°C, 20min)	密封 SEAT (20°C, 20min)	氮气 Gas (20°C, 20min)	保压 Hold (20°C)
	A (MPa)	A (MPa)	氮气 Gas	A (MPa)
150LB	4.0	-	-	3.00
300LB	1.50			5.00
600LB	3.00			10.00
900LB	4.50			15.00
1500LB	7.50			25.00
2500LB	12.50			42.00
4500LB	22.50			75.00

FORGED STEEL SWING CHECK VALVE – Bolted Cover
锻钢摇动式止回阀 – 螺栓固定盖

材料标准 STANDARD MATERIALS

零件名称 PART NAMES	材料 MATERIALS
阀体 BODY	注明 NOTE①
阀盖 BONNET	注明 NOTE①
阀座 SEAT	ASTM A105+HF
阀瓣 DISC	ASTM A276 410
垫片 GASKET	304SS
螺栓 COVER BOLT	ASTM A193 B7
螺母 NUT	ASTM A194 2H

注解NOTE: ① A105, LF2, F6, F11, F22, F304(L), F316(L), F347, F321, F51, F55, F60, Monel, Monel / Hastelloy, etc.

技术参数 SPECIFICATIONS

① 设计制造标准 Design & Manufacture Conform to: API 602, 3000SC, ASME B16.34/B16.5

② 阀门尺寸 Valve Size: 1/2"~4" ③ 公称等级 Applicable Rating: Class 150SLB ~ 2500SLB

④ 温度等级 Temperature Rating: Up to 500°C

⑤ 结构特征 Structure Features:

- 连接端形式 End Connection: 螺纹、承插焊或对焊端连接 Threaded, Socket-Welded or Butt-Welded
- 螺栓固定盖 Bolted Cover ● 缩径 / 全径 Reduce Bore / Full Bore

压力试验 (MPa) PRESSURE TEST (MPa)				
级别 CLASS	壳体 BODY (20°C, 20min)	密封 SEAT (20°C, 20min)	氮气 Gas (20°C, 20min)	保压 Hold (20°C)
	A (MPa)	A (MPa)	氮气 Gas	A (MPa)
150LB	3.0	-	-	2.120
300LB	8.0			5.850

FORGED STEEL SWING CHECK VALVE – Pressure-Seal Cover
锻钢摇动式止回阀 – 压力自紧式密封阀盖

材料标准 STANDARD MATERIALS

零件名称 PART NAMES	材料 MATERIALS
阀体 BODY	注明 NOTE①
阀盖 BONNET	注明 NOTE①
阀座 SEAT	ASTM A105+HF
阀瓣 DISC	ASTM A276 410
密封垫圈 P-S SEAT	304SS
螺栓 COVER BOLT	ASTM A193 B7
螺母 NUT	ASTM A194 2H

注解NOTE: ① A105, LF2, F6, F11, F22, F304(L), F316(L), F347, F321, F51, F55, F60, Monel, Monel / Hastelloy, etc.

技术参数 SPECIFICATIONS

① 设计制造标准 Design & Manufacture Conform to: API 602, 3000SC, ASME B16.34/B16.5

② 阀门尺寸 Valve Size: 1/2"~4" ③ 公称等级 Applicable Rating: Class 150SLB ~ 2500SLB

④ 温度等级 Temperature Rating: Up to 500°C

⑤ 结构特征 Structure Features:

- 连接端形式 End Connection: 螺纹、承插焊或对焊端连接 Threaded, Socket-Welded or Butt-Welded
- 压力自紧式密封阀盖 Pressure-Seal Cover ● 缩径 / 全径 Reduce Bore / Full Bore

压力试验 (MPa) PRESSURE TEST (MPa)				
级别 CLASS	壳体 BODY (20°C, 20min)	密封 SEAT (20°C, 20min)	氮气 Gas (20°C, 20min)	保压 Hold (20°C)
	A (MPa)	A (MPa)	氮气 Gas	A (MPa)
150LB	4.0	-	-	3.00
300LB	1.50			5.00
600LB	3.00			10.00
900LB	4.50			15.00
1500LB	7.50			25.00
2500LB	12.50			42.00
4500LB	22.50			75.00

FORGED STEEL FLANGED SWING CHECK VALVE – Bolted Cover

锻钢法兰连接旋启式止回阀 – 螺栓固定盖

材料标准 STANDARD MATERIALS

零件名称 PART NAMES	材料 MATERIALS
阀体 BODY	选择 NOTE①
阀盖 BONNET	选择 NOTE①
阀座 SEAT	ASTM A276 410+HF
阀瓶 DISC	ASTM A276 420
垫片 GASKET	304+GRAPHITE
螺栓 COVER BOLT	ASTM A193 B7
螺母 NOCKER	ASTM A563 C7M

注释NOTE：① A105, LF2, F9, F11, F22, F304(L), F316(L), F347, F321, F51, F53, F55, Monel, Monel Hastelloy, etc

压力等级 (磅级) PRESSURE TEST (PSIG)					
等级 CLASS	壳体 SHELL (psig)	密封 SEAT (psig)	等级 CLASS	壳体 SHELL (psig)	密封 SEAT (psig)
150LB	450	-	-		325
300LB	1125				825
600LB	2250				1650
900LB	3375				2175
1500LB	5625				3450
2500LB	9375				4950

技术参数 SPECIFICATIONS

设计制造标准 Design & Manufacture Conformity: API 600, 6D/602, ASME B16, BS1414.5

公称压力 Valve Size: 1/2"–4" 压力等级 Approximate Rating: Class 150LB – 1500LB

温度等级 Temperature Rating: Up to 538°C

结构特点 Structure Features:

- 连接端类型 End Connection: 法兰连接端 Flanged Type
- 螺栓固定盖 Bolted Cover
- 阀座 Reduce Bore

FORGED STEEL FLANGED SWING CHECK VALVE – Bolted Cover

锻钢法兰连接旋启式止回阀 – 螺栓固定盖

材料标准 STANDARD MATERIALS

零件名称 PART NAMES	材料 MATERIALS
阀体 BODY	选择 NOTE①
阀盖 BONNET	选择 NOTE①
阀座 SEAT	ASTM A276 410+HF
阀瓶 DISC	ASTM A276 420
垫片 GASKET	304+GRAPHITE
螺栓 COVER BOLT	ASTM A193 B7
螺母 NOCKER	ASTM A563 C7M

注释NOTE：① A105, LF2, F9, F11, F22, F304(L), F316(L), F347, F321, F51, F53, F55, Monel, Monel Hastelloy, etc

压力等级 (磅级) PRESSURE TEST (PSIG)					
等级 CLASS	壳体 SHELL (psig)	密封 SEAT (psig)	等级 CLASS	壳体 SHELL (psig)	密封 SEAT (psig)
150LB	450	-	-		325
300LB	1125				825
600LB	2250				1650
900LB	3375				2175
1500LB	5625				3450
2500LB	9375				4950

技术参数 SPECIFICATIONS

设计制造标准 Design & Manufacture Conformity: API 600, 6D/602, ASME B16, BS1414.5

公称尺寸 Valve Size: 1/2"–4" 压力等级 Approximate Rating: Class 150LB – 1500LB

温度等级 Temperature Rating: Up to 538°C

结构特点 Structure Features:

- 连接端类型 End Connection: 法兰连接端 Flanged Type
- 螺栓固定盖 Bolted Cover
- 阀座 Reduce Bore

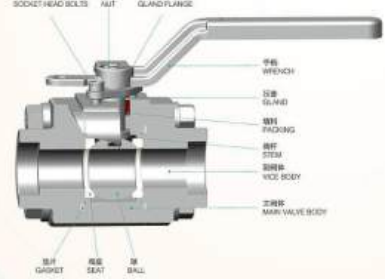

锻钢球阀结构有两种设计形式：

(1) 二片式结构，其中螺栓连接，密封材料采用PEEK密封；

(2) 三片式结构，中间用螺栓连接，根据所选的阀座与垫片等辅料的材料不同，适应不同的工作温度和介质。

Dervos forged steel ball valve is available in two different kinds of structure:

(1) 2 Piece structure: Threaded bonnet, RPTFE or PEEK sealed;

(2) 3 Piece structure: Bolted bonnet, different kinds of material for seats, gaskets and packing can be chosen according to different using conditions.

FORGED STEEL SIDE ENTRY BALL VALVE – Free Floating Ball (3 Piece)

锻钢侧入口球阀 – 三片式自由浮动式

材料标准 STANDARD MATERIALS

零件名称 PART NAMES	材料 MATERIALS
阀体 BODY	法兰 NOTE①
阀盖 BONNET	法兰 NOTE①
阀座 SEAT	N-PTFE
球体 BALL	ASTM A276 316
阀杆 STEM	ASTM A276 316
密封 GASKET	316+GRAPHITE
上密封圈/下 SHCK SEAT GASKET	PTFE
填料 PACKING	GRAPHITE
手柄 WRENCH	CARBON STEEL

注解NTE：① A105 LF5 F5 F11 F22 TP304L1 F316L1 F347 F321 F51 F53 Inconel Monel Hastelloy etc.

技术参数 SPECIFICATIONS

设计及制造标准 Design & Manufacture Conform to: API 608, 3000B1, ASME B16.34/B16.11/B1.20.1/B16.25

公称尺寸 Valve Size: 1/2"~4" 压力等级 Applicable Rating: Class 150LB ~ 1500LB

环温等级 Temperature Rating: Up to 350°C

阀体结构 Structure Features: ★3件式阀体 3 Piece Body

- 连接端类型 End Connection: 螺纹、承插焊或对焊连接端 Threaded, Socket-Welded or Butt-Welded
- 自由浮动式 Floating Ball Type
- 全通孔 Reduce Bore / Full Bore
- 防火结构 Fire Safety Construction (API 607)
- 手动操作 Manual Operating

型号 MODEL	阀体 BODY (psig)	试验 TEST (psig)	阀座 SEAT (psig)
	水 WATER	水 WATER	空气 Air	水 WATER
150LB	450	-	30	300
300LB	1125			825
600LB	2250			1650
900LB	3375			2475
1500LB	5625			3300
2500LB	9375			6150

FORGED STEEL SIDE ENTRY BALL VALVE – Free Floating Ball (2 Piece)

锻钢侧入口球阀 – 两片式自由浮动式

材料标准 STANDARD MATERIALS

零件名称 PART NAMES	材料 MATERIALS
阀体 BODY	法兰 NOTE①
阀盖 BONNET	法兰 NOTE①
阀座 SEAT	N-PTFE
球体 BALL	ASTM A276 316
阀杆 STEM	ASTM A276 316
密封 GASKET	316+GRAPHITE
上密封圈/下 SHCK SEAT GASKET	PTFE
填料 PACKING	GRAPHITE
手柄 WRENCH	CARBON STEEL

注解NTE：① A105 LF5 F5 F11 F22 TP304L1 F316L1 F347 F321 F51 F53 Inconel Monel Hastelloy etc.

技术参数 SPECIFICATIONS

设计及制造标准 Design & Manufacture Conform to: API 608, 3000B1, ASME B16.34/B16.11/B1.20.1/B16.25

公称尺寸 Valve Size: 1/2"~4" 压力等级 Applicable Rating: Class 150LB ~ 1500LB

环温等级 Temperature Rating: Up to 350°C

阀体结构 Structure Features: ★2件式阀体 2 Piece Body

- 连接端类型 End Connection: 法兰连接端 Flanged Type
- 自由浮动式 Floating Ball Type
- 全通孔 Reduce Bore / Full Bore
- 防火结构 Fire Safety Construction (API 607)
- 手动操作 Manual Operating

型号 MODEL	阀体 BODY (psig)	试验 TEST (psig)	阀座 SEAT (psig)
	水 WATER	水 WATER	空气 Air	水 WATER
150LB	450	-	30	300
300LB	1125			825
600LB	2250			1650
900LB	3375			2475
1500LB	5625			3300
2500LB	9375			6150

DERVOS
厦门德沃特阀门科技股份有限公司
Xiamen Dervos Valves Industry Co.,Ltd.

FORGED STEEL SIDE ENTRY BALL VALVE – Free Floating Ball (3 Piece)

锻钢侧入口球阀 – 三片式自由浮动式

材料标准 STANDARD MATERIALS

零件名称 PART NAMES	材料 MATERIALS
阀体 BODY	法兰 NOTE①
阀盖 BONNET	法兰 NOTE①
阀座 SEAT	ASTM A276 316L(ET)
球体 BALL	ASTM A276 316L(ET)
阀杆 STEM	ASTM A276 316
密封 GASKET	316+GRAPHITE
上密封圈/下 SHCK SEAT GASKET	PTFE
填料 PACKING	GRAPHITE
手柄 WRENCH	CARBON STEEL

注解NTE：① A105 LF5 F5 F11 F22 TP304L1 F316L1 F347 F321 F51 F53 Inconel Monel Hastelloy etc.

技术参数 SPECIFICATIONS

设计及制造标准 Design & Manufacture Conform to: API 608, 3000B1, ASME B16.34/B16.11/B1.20.1/B16.25

公称尺寸 Valve Size: 1/2"~4" 压力等级 Applicable Rating: Class 150LB ~ 1500LB

环温等级 Temperature Rating: Down To: -196°C

阀体结构 Structure Features: ★3件式阀体 3 Piece Body

- 连接端类型 End Connection: 螺纹、承插焊或对焊连接端 Threaded, Socket-Welded or Butt-Welded
- 自由浮动式 Floating Ball Type
- 全通孔 Reduce Bore / Full Bore
- 防火结构 Fire Safety Construction (API 607)
- 手动操作 Manual Operating

型号 MODEL	阀体 BODY (psig)	试验 TEST (psig)	阀座 SEAT (psig)
	水 WATER	水 WATER	空气 Air	水 WATER
150LB	450	-	30	300
300LB	1125			825
600LB	2250			1650
900LB	3375			2475
1500LB	5625			3300
2500LB	9375			6150

FORGED STEEL SIDE ENTRY CRYOGENIC BALL VALVE – Free Floating Ball (3 Piece)

锻钢侧入口低温球阀 – 三片式自由浮动式

材料标准 STANDARD MATERIALS

零件名称 PART NAMES	材料 MATERIALS
阀体 BODY	法兰 NOTE①
阀盖 BONNET	法兰 NOTE①
阀座 SEAT	PCTFE
球体 BALL	ASTM A276 316
阀杆 STEM	ASTM A276 316
密封 GASKET	316+GRAPHITE
上密封圈/下 SHCK SEAT GASKET	PCTFE
填料 PACKING	GRAPHITE
手柄 WRENCH	CARBON STEEL

注解NTE：① A105 LF5 F5 F11 F22 TP304L1 F316L1 F347 F321 F51 F53 Inconel Monel Hastelloy etc.

技术参数 SPECIFICATIONS

设计及制造标准 Design & Manufacture Conform to: API 608, 3000B1, ASME B16.34/B16.11/B1.20.1/B16.25

公称尺寸 Valve Size: 1/2"~4" 压力等级 Applicable Rating: Class 150LB ~ 1500LB

环温等级 Temperature Rating: Down To: -196°C

阀体结构 Structure Features: ★3件式阀体 3 Piece Body

- 连接端类型 End Connection: 螺纹、承插焊或对焊连接端 Threaded, Socket-Welded or Butt-Welded
- 自由浮动式 Floating Ball Type
- 全通孔 Reduce Bore / Full Bore
- 防火结构 Fire Safety Construction (API 607)
- 手动操作 Manual Operating

型号 MODEL	阀体 BODY (psig)	试验 TEST (psig)	阀座 SEAT (psig)
	水 WATER	水 WATER	空气 Air	水 WATER
150LB	450	-	30	300
300LB	1125			825
600LB	2250			1650
900LB	3375			2475
1500LB	5625			3300
2500LB	9375			6150

FORGED STEEL SIDE ENTRY BALL VALVE – Free Floating Ball (3 Piece)
锻钢侧入口球阀 – 浮动式自由球动作

材料标准 STANDARD MATERIALS

零件名称 PART NAMES	材料 MATERIALS
阀体 BODY	法兰 ASTM A105
阀盖 BONNET	法兰 ASTM A105
阀座 SEAT	R-PTFE
球体 BALL	ASTM A276 316
阀杆 STEM	ASTM A276 316
O型密封圈 O-RING	NBR
上密封垫片 BACK SEAT GASKET	PTFE
填料 PACKING	GRAPHITE
手柄 WRENCH	CARBON STEEL

注解材料: (S.A.E) J75, F5, F11, F22, T304L, F316L(J.I.S) FMC F301, F51, F55, Inconel, Monel, Hastelloy C, etc

技术参数 SPECIFICATIONS

设计和制造标准 Design & Manufacture Conform to: API 608, ISO9001, ASME B16.34/B16.11/B1.20.1/B16.25
公称尺寸范围 Valve Size: 1/2"~4" 公称压力等级 Applicable Rating: Class 150LB – 2500LB
环境温度范围 Temperature Rating: Up to 350°C
阀体结构特征 Structure Features: ● 三件式锻造 3 Piece Body
● 连接端类型 End Connection: 螺纹、承插焊或对焊连接端 Threaded, Socket-Welded or Butt-Welded
● 浮动式球体 Floating Ball Type ● 全孔 / 全通 Reduce Bore / Full Bore
● 防火结构 Fire Safety Construction (API 607) ● 手动操作 Manual Operating

压力等级 (ANSI) PRESSURE TEST (ATM)					
等级 Class	壳体 SHELL (psig)	座密封 SEAT (psig)		阀杆 STEM (psig)	
	水 WATER	水 WATER	空气 GAS	水 WATER	
150LB	450				300
300LB	1125				825
600LB	2250				1650
900LB	3375				2475
1500LB	3300				2400
2500LB	5625				4100
2500LB	5625				4400

FORGED STEEL SIDE ENTRY BALL VALVE – Free Floating Ball (2 Piece)
锻钢侧入口球阀 – 两片式自由浮动式

材料标准 STANDARD MATERIALS

零件名称 PART NAMES	材料 MATERIALS
阀体 BODY	法兰 ASTM A105
阀盖 BONNET	法兰 ASTM A105
阀座 SEAT	R-PTFE
球体 BALL	ASTM A276 316
阀杆 STEM	ASTM A276 316
O型密封圈 O-RING	NBR
上密封垫片 BACK SEAT GASKET	PTFE
填料 PACKING	GRAPHITE
手柄 WRENCH	CARBON STEEL

注解材料: (S.A.E) J75, F5, F11, F22, T304L, F316L(J.I.S) FMC F301, F51, F55, Inconel, Monel, Hastelloy C, etc

技术参数 SPECIFICATIONS

设计和制造标准 Design & Manufacture Conform to: API 608, ISO9001, ASME B16.34/B16.11/B1.20.1/B16.5
公称尺寸范围 Valve Size: 1/2"~4" 公称压力等级 Applicable Rating: Class 150LB – 2500LB
环境温度范围 Temperature Rating: Up to 350°C
阀体结构特征 Structure Features:
● 二件式锻造 2 Piece Body ● 连接端类型 End Connection: 法兰连接端 Flanged Type
● 浮动式球体 Floating Ball Type ● 全孔 / 全通 Reduce Bore / Full Bore
● 防火结构 Fire Safety Construction (API 607) ● 手动操作 Manual Operating

压力等级 (ANSI) PRESSURE TEST (ATM)					
等级 Class	壳体 SHELL (psig)	座密封 SEAT (psig)		阀杆 STEM (psig)	
	水 WATER	水 WATER	空气 GAS	水 WATER	
150LB	450				300
300LB	1125				825
600LB	2250				1650
900LB	3375				2475
1500LB	3300				2400
2500LB	5625				4100
2500LB	5625				4400

型号对照表 Number Chart

示例: 闸阀, 广BOLB, 焊接端连接, 承插焊连接, 阀体材料A105, 内件NO.8
Example: Gate, F BOLB, Sided Screw, Socket-Welded, Body material A105, Trim NO.8

G	25	8	B	5	A105	8
①	②	③	④	⑤	⑥	⑦

① 阀门类型 Valve Type

类型 Type	球阀 Ball Valve	截止阀 Globe Valve	升降式止回阀 Lift Check Valve	旋启式止回阀 Swing Check Valve	Y型截止阀 Y-Globe Valve	V型截止阀 V-Globe Valve	球阀 Ball Valve	闸阀 Sluice
代号 Code	G	GL	F	S	YGL	V	Q	M

② 阀门尺寸 Valve size

英寸 Inch	1/2"	3/4"	1/2"	3/4"	1"	1 1/4"	1 1/2"	2"	2 1/2"	3"	4"
代号 Code	8	10	15	20	25	32	40	50	65	80	100

③ 公称压力 Nominal Pressure

磅级 Class	150	300	600	900	1500	2500
代号 Code	1	3	6	9	15	25

4. 结构形式 Structural Type

类型 Type	阀盖螺栓连接 Bolted Bonnet	阀盖焊接连接 Welded Bonnet	自紧密封连接 Pressure-Seal Bonnet
代号 Code	B	W	P

⑤ 端接类型 End Connection

类型 Type	承插焊连接 Socket-Welded	螺纹连接 Threaded	对焊焊连接 Butt-Welded	螺纹承插焊连接 Threaded + Socket-Welded	凸面法兰 Raised Face Flange	环连法兰 RTJ Flange
代号 Code	S	T	B	ST	R	J

6. 阀体材料 Body Material

A105	LF2	F11	F22	F51	T304	F304L	F316/F316L	其他

⑦ 内件材料 Trim Material

密封材料代号 Surface Material Code	阀座密封面 Seat Surface	阀盖密封面 Seat Surface	阀杆 Stem
1	ASTM 410	ASTM 410	ASTM 410
2	ASTM 304	ASTM 304	ASTM 304
2H	CoCrA	CoCrA	ASTM 304
25	ASTM 304	CoCrA	ASTM 304
3	CoCrA	CoCrA	ASTM 410
8	ASTM 410	CoCrA	ASTM 410
9	Monel	Monel	Monel
16	ASTM 316	ASTM 316	ASTM 316
16H	CoCrA	CoCrA	ASTM 316
11	Monel	CoCrA	CoCrA
12	ASTM 316	CoCrA	ASTM 316
13	Alloy 20	Alloy 20	Alloy 20
14	Alloy 20	Alloy 20+CoCrA	Alloy 20